K744 filters list + cross over numbers

#	Part #	Description	Q-ty/ tractor	Retail, USD	Notes	Frequency
1	**NF59-02/A0201**	**Cab Air Filter**	2		In stock as DIFA 4708	Avery 250 hours check and replace if needed
2	**DIFA 5425MK**	**Transmission oil filter**	1			When alarm warning light
3	**X770687, part of 8421-1109010-32.10 complete assembly, P.387632.003 filter**	**Engine Intake Air Filter-External**	1		1 set = 2 filters : inner and outer	When alarm warning light, check every 250 hours
					Main assembly parts:	
					1) Donaldson P785426 (Main element)*,	
					2) P784869 (access cover assy)*,	
					3) H770089 (raincap)	
					4) P016845 (Mounting band)	
4	**4701800309**	**Mercedes Oil Filter**	1			300-750 hrs
5	**4700907552**	**Mercedes Fuel Filter**	1			At least every 2 yrs or more often
6	**A 000 142 10 89**	**Mercedes DEF/Urea Filter**	1			2 years or after 2,850 galons, what ever is earlier
7	**DIFA 6403**	**Coarse Fuel Filter/Water separator**	1			Clear residue at the bottom/drain water periodicaly. Replace filter every 500 hours
8	**DIFA-5402MK**	**Hydraulics filter**	1 or 2			Avery 250 hours
9	**TB1374T**	**Air brakes - air dryer filter**	1			

Head Office: 3-1136 Centre St, Ste. 124, Thornhill, ON, L4J 3M8, Canada
Warehouse: 2682 Highway 34, Hawkesbury, Ontario, K6A 2R2, Canada
Tel: 1-855-2GO-4MTZ (1-855-246-4689) **Fax:** 1-647 933-9066 **E-mail:** info@mtzequipment.com **Web:** www.mtzequipment.com

Substitutions / cross over numbers

#1	NF59-02/A0201 Crossover filters: DIFA SF-FILTER KNECHT/MAHLE MANN DEUTZ FAHR FENDT John Deere BOSCH HiFi	Cab Air Filer 4708 SKL2546 LA66 C48140 4307641 H716810130010 L58629, M47494 1987431201 SC17814	 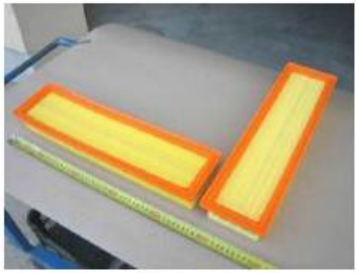 Air filter element DIFA , (H=65mm W=124mm L=472mm), (MANN C48140, HR SC17814)	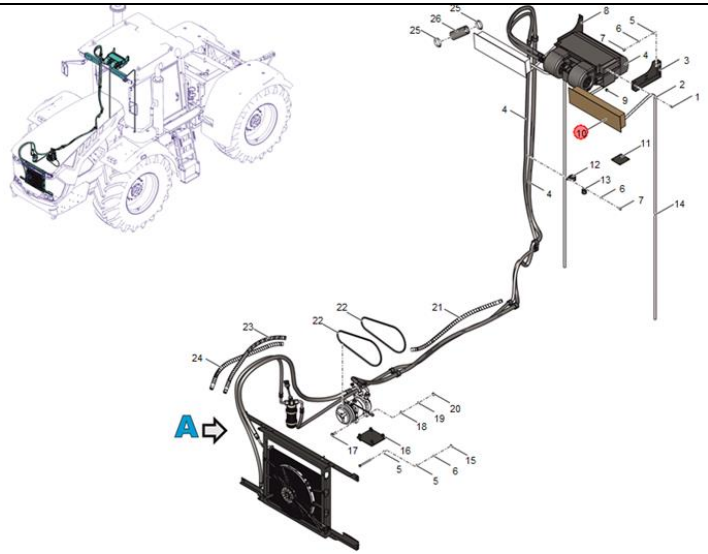
#2	DIFA 5425MK Crossover filters: Amkodor	Transmission Oil Filter EFM 43x95	 Oil filter element DIFA, (H=200mm D=95mm d1=43mm d2=43mm)	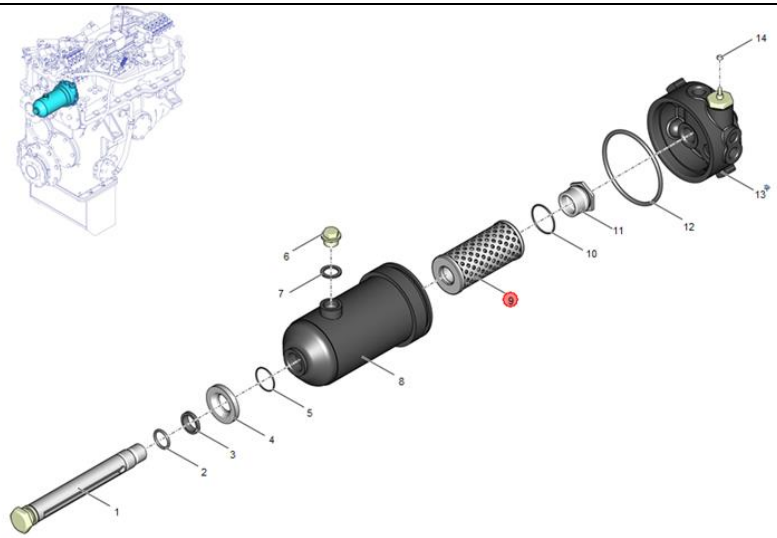

Head Office: 3-1136 Centre St, Ste. 124, Thornhill, ON, L4J 3M8, Canada
Warehouse: 2682 Highway 34, Hawkesbury, Ontario, K6A 2R2, Canada
Tel: 1-855-2GO-4MTZ (1-855-246-4689) **Fax:** 1-647 933-9066 **E-mail:** info@mtzequipment.com **Web:** www.mtzequipment.com

#3	X770687 Crossover filters: JCB METSO DONALDSON SF Schupp FleetGuard New Holland	Donaldson External Air filter 333T1098+333/T1105 MM0311584 P785427 SL81762SET AS4271 47678168	 Air filter element Donaldson(P785426(H=573mm; D=313mm; d=175mm+P785427) 	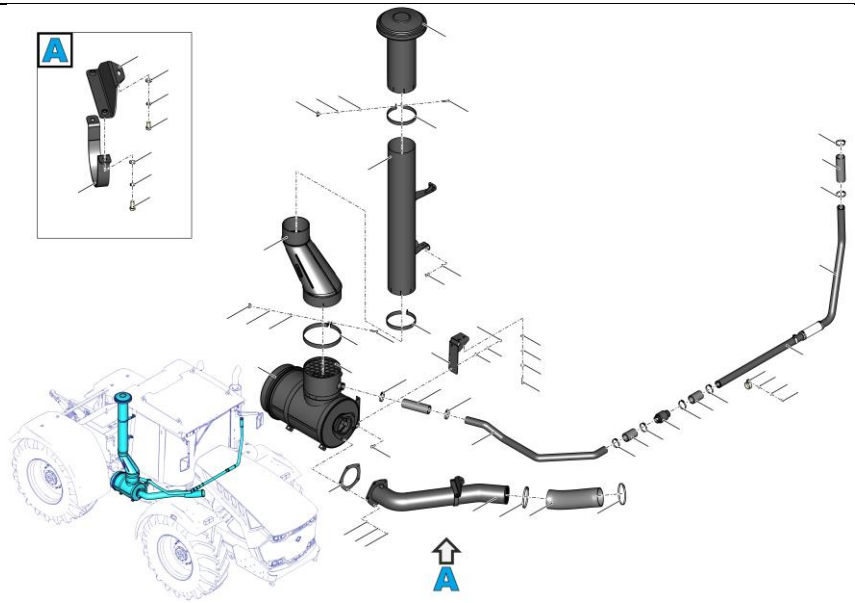

#4	4701800309 Crossover filters: Mercedes Mercedes MAHLE MANN BOSCH WIX	Mercedes Engine Oil Filter A4701800309 003MT4701800309 OX 423/9D HU12006Z F026407254 WL10246		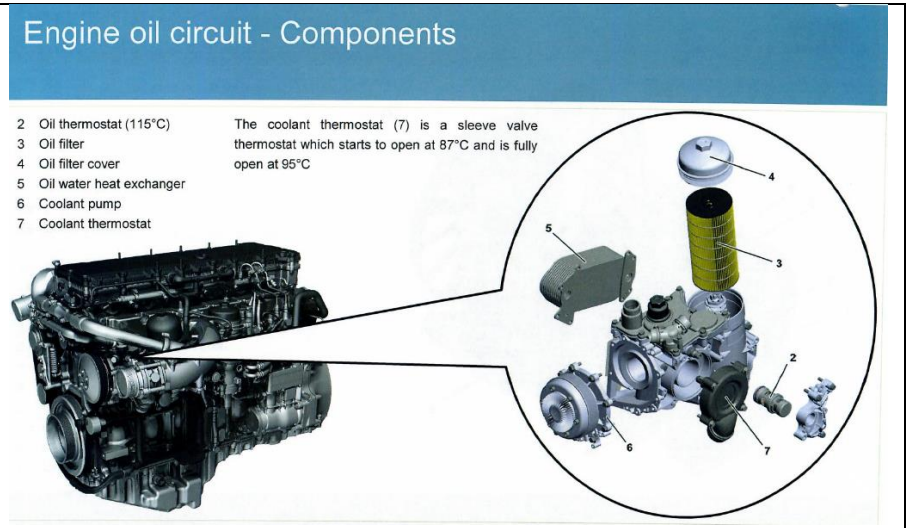
#5	4700907552 Crossover filters: Mercedes Mercedes HENGST Fleetguard MAHLE	Mercedes Engine Fuel Filter A4700907552 003MT4700907552 E440KPD2692 FK13923 KX406KIT	 	 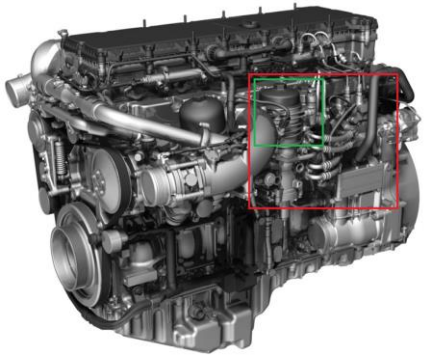

#6	A 000 142 10 89 Crossover filters: Detroit Diesel Cummins Paccar FleetGuard	Mercedes DEF/ Urea Filter DDE A0001421089 4388378 2122909PE UF106		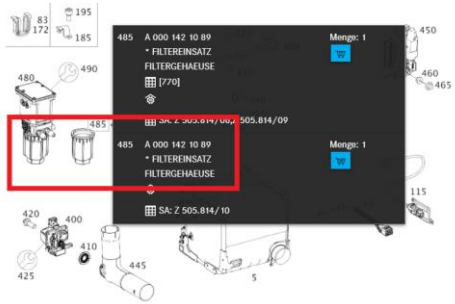
#7	DIFA 6403 Crossover filters: DIFA RACOR Daimler Deutz FORD Hengst Mahle MAN FleetGuard FleetGuard Volvo Baldwin	Coarse Fuel Filter/ water separator 6403/01 R160T A 000 477 13 02 1292404 3C46-9176-CA 528200091 76832430 51.12503.0051 FS19737 FS19914 21409660 BF1391-O		

#8	DIFA-5402MK Crossover filters:	Hydraulics Filter	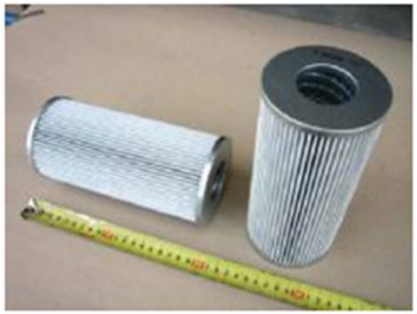 Oil filter element DIFA,, (H=200 mm; D=95mm; d1=44mm; d2=44mm),(63 1VM-1-SM) 	 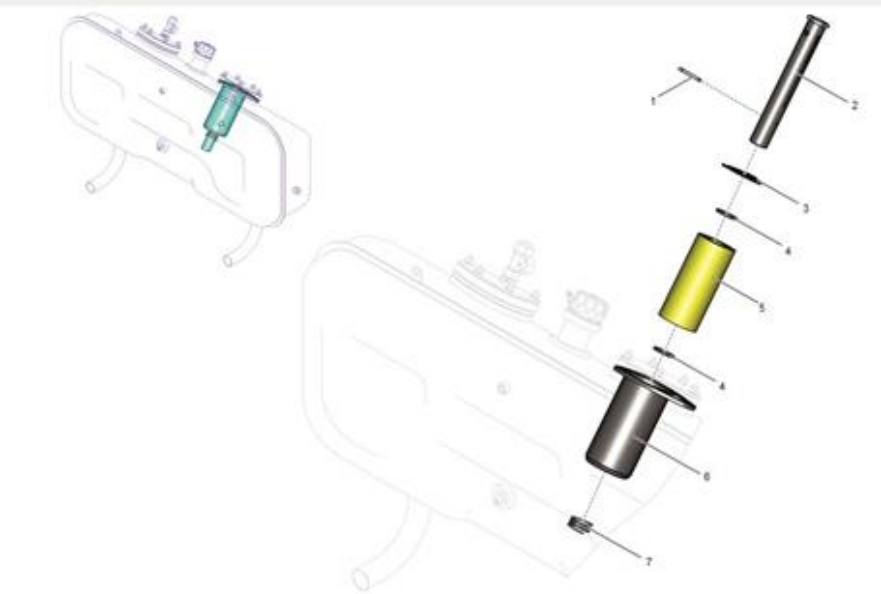

#9	TB1374T Crossover filters: Wabco Donaldson BALDWIN MAHLE DAIMLER	Air Pneumatic filter 4324100202 P951413 BA5379 ,BA5592 AL24 4295795	 Air filter element HR, M39x1.5 (RHT) 13 bar, (P9514 13) 	